Title: Ninfield

SPN Regional Development Plan

Author: C Winch

Version: 2.5

Date: March 2014

All of the cost numbers displayed in this document are before the application of on-going efficiencies and real price effects.

Document History

Version	Date	Revision Class	Originator	Section Update	Details
2.4	24/02/14	Minor	SJE	4	Added project description for Marden 8117
2.4	24/02/14	Minor	SJE	4	Added project description for Ripe 8123
2.4	24/02/14	Minor	SJE	4	Added project description for Uckfield 8125
2.4	24/02/14	Minor	SJE	4	Added project description for Wadhurst 8126
2.4	24/02/14	Minor	SJE	4	Added project description for Hastings Main 3095
2.4	24/02/14	Minor	SJE	4	Added project description for Marden Tee 3096
2.4	27/02/14	Minor	SJE	2.1	Included substation description for Hastings 132kV and group substations
2.4	27/02/14	Minor	SJE	2.1	Included substation description for Ninfield 132kV and group substations
2.4	27/02/14	Minor	SJE	2.1	Included substation description for Eastbourne 132kV and group substations
2.4	27/02/14	Minor	SJE	2.1	Included substation description for Polegate 132kV and group substations
2.4	27/02/14	Minor	SJE	2.1	Included substation description for Lewis 132kV and group substations
2.4	27/02/14	Minor	SJE	2.1	Included substation description for Newhaven 132kV and group substations
2.4	27/02/14	Minor	SJE	2.1	Included substation description for Hartley 132kV and group substations
2.4	06/03/14	Major	SJE	Table 7	New NAMP Table added
2.4	06/03/14	Major	SJE	Table 14	New NAMP Table added
2.4	06/03/14	Minor	SJE	4.3.2	LI table updated for Rye
2.5	23/03/14	Minor	SJE	4	Project descriptions updated

Contents

1 INTRODUCTION 4
1.1 EXECUTIVE SUMMARY 4
1.2 PROPOSED PROJECTS >£1M 5
1.3 COSTS PROFILE 5
1.4 OUTPUT MEASURES – LOAD INDEX 6
1.5 OUTPUT MEASURES – HEALTH INDEX 6
1.6 PRINCIPAL RISKS AND DEPENDENCIES 7
2 NETWORK CONFIGURATION 8
2.1 EXISTING NETWORK 8
2.2 EMBEDDED GENERATION 11
2.3 NETWORK CHANGES IN PROGRESS 11
3 NETWORK DEVELOPMENT CONSIDERATIONS 12
3.1 ASSET REPLACEMENT 12
3.2 SECURITY OF SUPPLY ANALYSIS 15
3.3 OPERATIONAL AND TECHNICAL CONSTRAINTS 17
3.4 NATIONAL GRID 17
3.5 NETWORK CONSTRAINTS 17
3.6 SMART DEMAND RESPONSE 17
4 RECOMMENDED STRATEGY 18
4.1 PROPOSED INTERVENTIONS 18
4.2 COSTS AND PHASING 20
4.3 HI / LI IMPROVEMENT 22
4.3.1 HI Improvement 22
4.3.2 LI Improvement (with and without intervention) 24
5 REFERENCES 26
5.1 APPENDICES 26
5.2 DOCUMENT HISTORY 26
6 DOCUMENT SIGN OFF 27

Introduction

1.1 Executive Summary

This Regional Development Plan (RDP) reviews UK Power Networks (UKPN's) SPN network supplied from Ninfield 400/132kV Grid Supply Point (GSP) with an aggregate group winter peak of 448MW (Winter – (W)) across 10 SPN 132kV grid substations and 39 SPN 33kV primary substations. This is forecast to increase to 509MW by 2023.The aggregate firm capacity attributed to the GSPs is 829MW (W),

Geographically, the associated electricity network covers a large percentage of the East Sussex network and a part of the Kent network. East Sussex has a population of 527,000 people, and this has increased by 34,000 (7%) since 2001. There are no known significant future load increases that are likely to materially impact on network growth in the area.

Embedded generation in the area includes the 60MW Windfarm at Little Cheyne which connects into Appledore 132kV switching station between Hastings Main and Ruckinge substations.

Optimisation between non-load related projects and load related projects has been considered and discussed in the RDP.

The establishment of a new Supergrid exit point at Little Horsted, a new 132kV switching station at Marden and the upgrading of Broadoak 33kV sub-station to 132kV operation are the major projects entailing redesign or reconfiguration of the network during ED1.

It is proposed to increase firm capacity at Broadoak 33kV Switching Station by establishing a new 132/33kV site at Broadoak comprising 2 x 60 MVA transformers and a new 10 panel indoor 33kV switchboard

Reinforcement: 21 substations have been identified for intervention during the ED1 period.

Asset Replacement: 38 projects have been identified for intervention during the ED1 period. This includes the installation of fibre optic links as part of the BT21CN mitigation programme. Where appropriate, this will be completed in conjunction with reconductoring projects to ensure the most cost effective solution is implemented.

Figure 1. General GSP area of supply

All of the cost numbers displayed in this document are before the application of on-going efficiencies and real price effects.

1.2 Proposed projects >£1M

The projects listed below have been identified in the current RDP and NAMP.

- Marden Tee 132kV Switchboard £4,734k
- Broadoak Group 33kV Reinforcement-Establish a new 132/33kV Grid £5,253k
- PO replacement Strategy (Little Horsted) £37,110k
- Hastings Main - 132kV Switchboard Replacement £7,776k
- Broad Oak Reservoir, 132kV OHL Diversion £4,099k
- Eastbourne Grid 132 KV Replace GT1B and GT2B £3,348k
- Northiam 33KV - Replace T1 and T2 £1,212k
- Ninfield Local - Replace T1 and T2 £1,212k
- Ocklynge Primary - Replace 11KV Switchgear £2,061k
- Lewes/Newhaven (PFC) install dark fibre £1,184k
- Hastings Local NWR 132/33kV transformer replacement (GT2C) £2,435k
- Little Common 33/11kV - Replace 11kV Switchgear £1,058k
- Rye Grid 132kV - Replace Grid Transformer (GT1) £1,928k
- Hartley to Hastings Main 132kV Tower Line (PNB) - 132kV Tower Line replacement (Circuit 2 & Earth wire) £2,461k
- Broadoak Local 33kV/11kV Reinforcement - Replace T1/T2 with 12/24 MVA transformers & 8 panel 11kV board £2,239k
- Crowborough Town 33kV/6.6kV – ITC £2,338k
- Hampden Park 33kV/11kV – ITC £2,458k
- Ripe 33kV/11kV Reinforcement - Replace T1 and add T2 £1,612k
- Rye 33kV/11kV Reinforcement - Replace T1/T2 with 12/24MVA units £1,390k
- Uckfield 33kV/11kV Reinforcement - Replace 2 x 10 MVA with 2 x 12/24 MVA PTxs £1,316k
- Southern Cross to Lewes 132kV: Replace 132kV Gas cable section between Southern Cross-Mile Oak £1,110k
- Hastings Main 33kV Reinforcement - Install new 5 panel indoor 33kV switchgear £2,024k

1.3 Costs profile

The table below provides the forecast aggregate NAMP cost for network expenditure under this RDP subject to project feasibility studies and final approval.

NAMP Table J less Indirect 19th February 2014

SR_Table S&R - Baseline_Final ED1 Re-											
Cat	Description	2015/2016	2016/2017	2017/2018	2018/2019	2019/2020	2020/2021	2021/2022	2022/2023	2023/2024	2024/2025
A&H	Total Asset Replacement	7,786	13,959	13,945	12,073	8,163	4,687	1,973	2,957	1,217	0
R&T	Total Reinforcement	3,763	5,484	4,508	274	0	36	172	262	232	0
	GRAND TOTAL	11,548	19,442	18,454	12,346	8,163	4,723	2,145	3,219	1,449	0

1.4 Output Measures – Load Index

The chart below illustrates the LI profile of the grid and primary substations covered in this RDP.

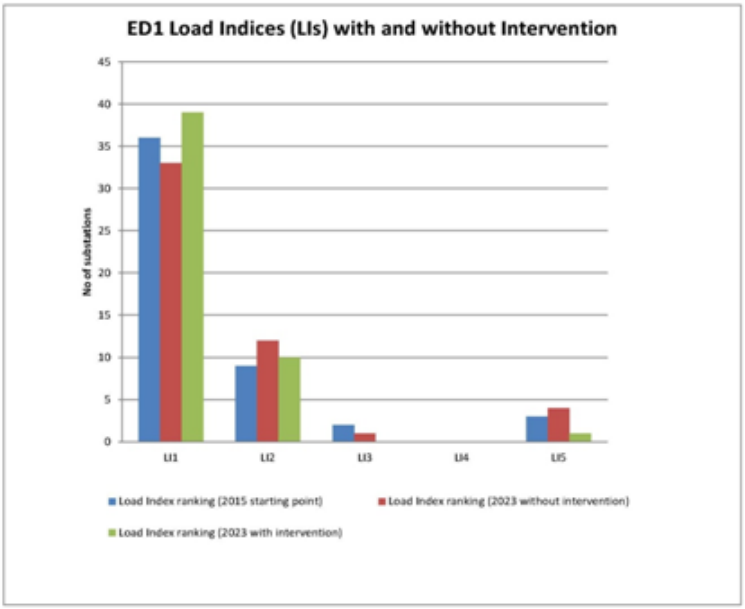

1.5 Output Measures – Health Index

The forecast health indices for 2015 and 2023, with and without intervention, are detailed below:

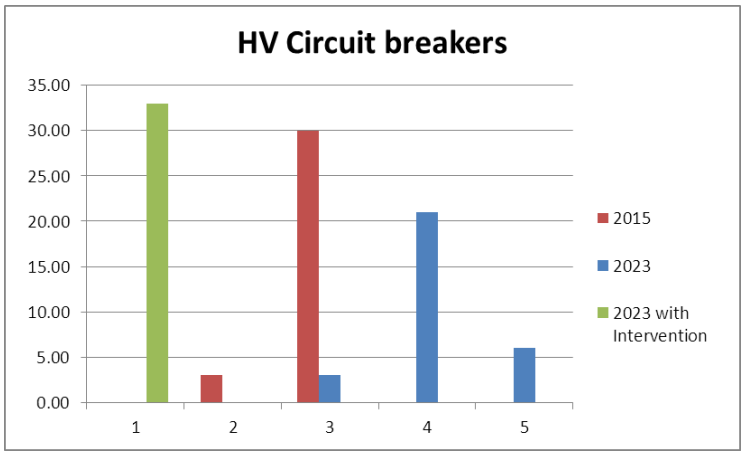

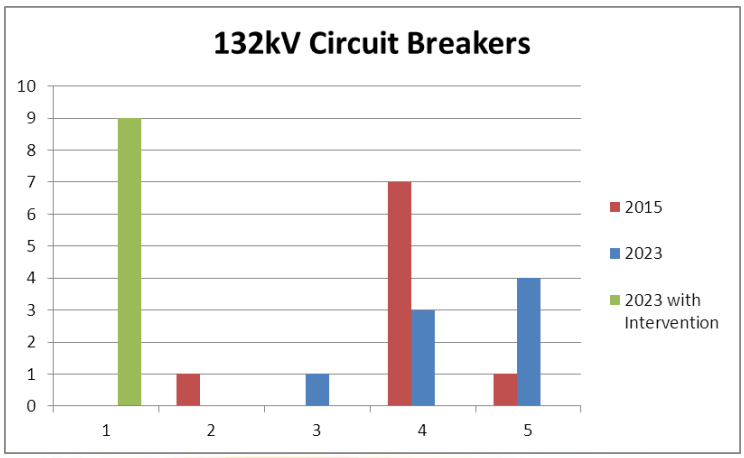

All of the cost numbers displayed in this document are before the application of on-going efficiencies and real price effects.

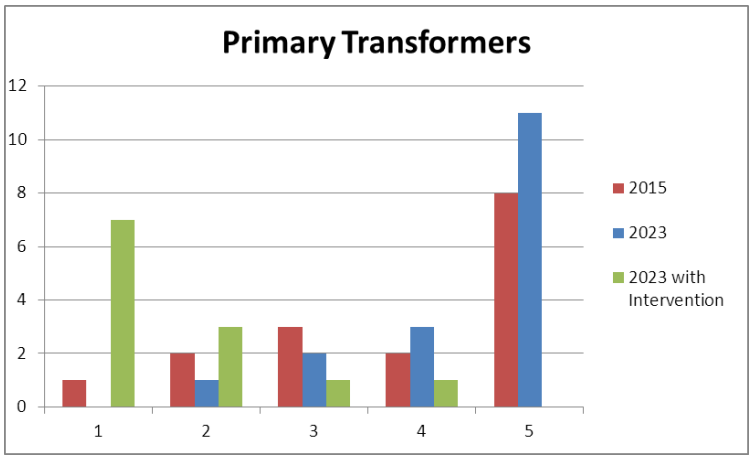

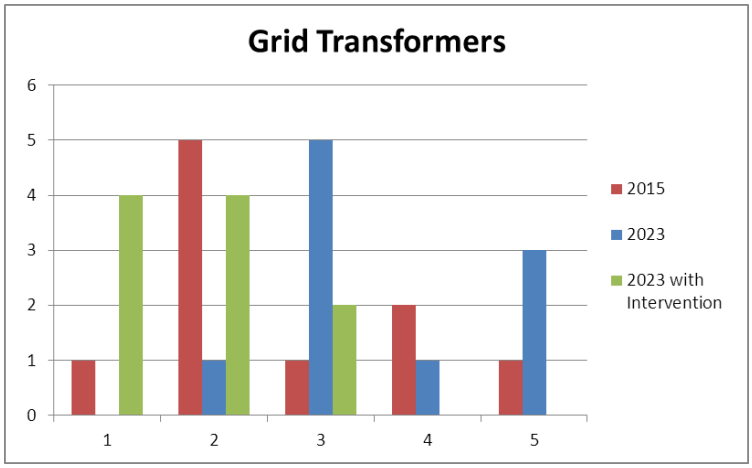

Principal Risks and Dependencies

The schemes covered in this RDP have been planned based on the planning load estimates 2013 with the 2011/12 maximum demand. The load forecasts are based on the element energy model. If the economic situation improves there is a risk that there will be shortfall of reinforcement schemes in the plan.

The load forecasts also include an assumed level of embedded generation being connected to the network. Should this generation not materialise, then a larger than forecast load growth could be realised.

Where Demand Site Response has been included at a substation, this is based on an assumption that customers will be willing to accept the scheme. In most cases these customers have not as yet been identified.

2 Network configuration

2.1 Existing Network

This Regional Development Plan reviews the SPN network supplied from the 4 x 240MVA transformers, 400/132kV Ninfield Grid Supply Point (GSP).

The supply area is includes to coastal towns of Eastbourne, Bexhill and Hastings together with the central region of East Sussex and western boarder of Kent. The current winter maximum demand is circa 460MW which is forecast to increase to 500MW by 2023 (August 2012 PLE's refer)

Figure 2. Ninfield Aerial View (NetMap)

The network is predominantly overhead lines with seven 132kV substations supplying eight Grid and 43 Primary substations. The substation hierarchy is detailed in Table 1 below:

A network geographic diagram is shown in Appendix A.

Substation Hierarchy

Ninfield 132kV

The National Grid exit point at Ninfield includes four 240MVA 400/132kV transformers. The GSP supplies the following 132kV Grid substations:

- Bexhill Town 33/11kV
- Little Common 33/11kV
- Mountfield 33/11kV
- Ninfield Local 33/11kV

Eastbourne 132/33kV

Eastbourne Grid consists of two 45MVA 132/33kV transformers which supplies the following primary substations:

- Eastbourne 132/11kV
- Ocklynch 33/11kV
- Meads 33/11kV
- Pevensey Bay 33/11kV

Polegate 132/33kV

Polegate consists of two 45MVA 132/33kV transformers which supplies the following primary substations:

- Hampden Park 33/11kV
- Polegate Town 33/11kV
- Hailsham 33/11kV

Lewes 132/33kV

Lewes consists of two 60MVA 132/33kV transformers which supplies the following primary substations:

- Lewes Grid 132/11kV
- Lewes Town 33/11kV
- Lewes Central 33/11kV
- Uckfield 33/11kV
- Buxted 33/11kV
- Newick 33/11kV
- Rip 33/11kV
- Horsebridge 33/11kV

Newhaven 132/33kV

Newhaven consists of two 60MVA 132/33kV transformers which supplies the following primary substations:

- Newhaven Town 33/11kV
- Seaford 33/11kV
- Peacehaven 33/11kV

Hartley 132kV

Hartley consists of two 60MVA 132/33kV transformers which supplies the following primary substations:

- Goudhurst 33/6.6kV
- Wadhurst 33/6.6kV
- Steel Cross 33/6.6kV
- Headcorn 33/6.6kV
- Staplehurst 33/6.6kV
- Marden 33/11kV
- Marden 33/6.6kV
- Wittersham 33/6.6kV
- Cranbrook 33/11kV
- Northiam 33/11kV
- Hawkhurst 33/11kV
- Robertsbridge 33/11kV

Broadoak 33kV Switching Station

- Broadoak 33/11kV
- DWS 33/6.6kV
- Jarvis Brook 33/11kV
- Ticehurst 33/11kV
- Horam 33/11kV

Crowborough 33kV Switching Station

- Crowborough Town 33/6.6kV

Hastings 132/33kV

Hastings consists of two 60MVA 132/33kV transformers which supplies the following primary substations:

- Hastings Local 132/11kV
- Hastings Network Rail 132/33kV
- Baldslow 132/11kV
- Rye Grid 132/33kV
- Rye Local 33/11kV
- Little Cheyne Wind Farm 132/33kV

2.2 Embedded Generation

There is a total of 90MVA of embedded generation including the 60MW Little Cheyne wind farm which is tee connected to the Rye–Ruckinge 132kV overhead line

Table 6: Connected embedded generation

GSP	Substation	Connection Voltage	Installed Capacity	Fuel Type	Connected / Accepted
		kV	MW		
Ninfield SGT	Eastbourne 11kV	11	2.00	CHP	Connected
Ninfield SGT	Lewes Town 11kV	11	5.20	Landfill Gas	Connected
Ninfield SGT	Newhaven Town 11kV	11	21.00	Waste Incineration	Connected
Ninfield SGT	Ninfield Local 11kV	11	1.90	Landfill Gas	Connected
Ninfield SGT	Little Cheyne Wind farm (Appledore)	132	60	Wind	Connected

In addition there is 1.75MW of LV G59 embedded generation installed across the RDP region.

2.3 Network Changes in Progress

The networks changes in progress are detailed in Table 3. The works include:

- Three 132kv overhead line refurbishments
- Three schemes installing optical fibre to replace metallic pilots cables
- Transformer asset replacements and Hasting and Wadhurst

Schemes currently in the planning and design phase which are programmed to commence in DPCR5 include:

- Switchgear asset replacement at Hastings and Seaford
- Reinforcements at Baldslow, Crowborough Town, Marden, Uckfield , Wadhurst and Newhaven
- Transformer refurbishment at Polegate

Table 3: Network Change in progress

SR_Table J		S&R - Baseline_Final ED1 Re-submission_19th February 2014 12:15					
Cat	GWPID	Pipeline Project ID	Pipeline Project ID	Description	2012/2013	2013/2014	2014/2015
A	1.02	1.02.03	3318	PO - Route Replacement Strategy	76	1,159	4,433
A	1.02	1.02.03	5540	PLB - Lewes/Southern Cross - Tower Refurbishment	569	147	0
A	1.26	1.26.10	5309	BT21CN Mitigation - Polegate/Eastbourne	45	29	0
A	1.02	1.02.03	7975	PCA - Northfleet East to Hartley - Insulator and Fittings Replacement	0	0	251
A	1.51	1.51.03	7908	Steel Cross 33/6.6kV - Replace Primary Transformer (T2)	0	0	83
A	1.48	1.48.06	3284	Hastings Main - 132kV Switchboard Replacement	0	0	25
A	1.51	1.51.01	5461	Hastings Local NWR 132/33kV Transformer Replacement (GT2C)	0	1,044	1,302
R	1.33	1.33.01	8125	Uckfield 33kV/11kV Reinforcement - Replace 2 x 10 MVA with 2 x 12/24 MVA PTxs	43	228	395
R	1.33	1.33.01	8126	Wadhurst 33kV/6.6kV Reinforcement - Replace T2 with 7.5 MVA 33/6.6kV Unit	0	170	284
R	1.33	1.33.01	8117	Marden 33kV/11kV - Replace T1 with 7.5/15 MVA unit	39	169	213
R	1.36	1.36.01	3096	Marden Tee 132kV Switchboarc	0	0	190
R	1.33	1.33.01	8111	Baldslow 33kV/11kV Reinforcement - Replace T1/T2 with 20/40 MVA Units & 10 Panel 11kV SWB	0	422	1,135

3 Network Development Considerations

3.1 Asset Replacement

Health indices for all network equipment covered in this RDP are listed in tables 8 to 12 below. The equipment groups covered include HV circuit breakers (6.6kV and 11kV), EHV circuit breakers (33kV), 66kV&132kV circuit breakers, primary transformers (33/11/6.6kV), grid transformers (132/33/11kV).

Six sites are projected to have HV switchgear in HI4&5 by 2024, no sites to have 33kV switchgear in HI4 by 2014, three sites have 132kV switchgear in HI4 &I5 by 2024, twelve sites have primary transformers in HI4&5 by 2024 and five sites have grid transformers in HI5 by 2024.

Table 4. HV Circuit breakers (11kV)

	2015					2024				
Substation	**No. HI1**	**No. HI2**	**No. HI3**	**No. HI4**	**No. HI5**	**No. HI1**	**No. HI2**	**No. HI3**	**No. HI4**	**No. HI5**
BALDSLOW 33/11KV		10					4	6		
BEXHILL TOWN		2	10					10	2	
BROADOAK 33/11KV		4	3				2	4	1	
BUXTED 33/11KV		7						7		
CRANBROOK 33KV		6					1	5		
CROSSWAYS 33/11KV	11						11			
CROWBOROUGH TOWN 33/6.6KV		7						7		
D.W.S. 33/6.6KV	1	3					1	3		
EASTBOURNE GRID 132 KV		2					2			
EASTBOURNE GRID 132/11KV		12					12			
EDENBRIDGE 33/11KV	8						8			
GOUDHURST 33KV		6	2					6	2	
HAILSHAM 33/11KV		8						8		
HAMPDEN PARK 33/11KV	1	8					1	8		
HASTINGS LOCAL 132/11KV		24					7	17		
HAWKHURST 33KV		7					7			
HEADCORN 33/6.6KV		6	2					5	3	
HORAM 33/11KV		3	5					3	5	
HORSEBRIDGE		7						7		
JARVIS BROOK 33/6.6KV		6					6			
LEWES CENTRAL 33KV		10					5	5		
LEWES TOWN		11						11		
LITTLE COMMON 33/11KV		2	10					2	9	1
LONGFIELD 33/11KV		8					4	4		
MARDEN 33/11KV		4					4			
MARDEN 33/6.6KV		4					4			
MOUNTFIELD 33KV		4	4				1	3	4	
NEWHAVEN TOWN 33KV		12					2	10		
NEWICK 33/11KV		3	5					3	5	
NINFIELD LOCAL		1	5					3	3	
NORTHIAM 33KV		7						3	4	
OCKLYNGE 33		1	11					4	5	3
PEACEHAVEN 33KV	2		8				2	3	5	
PEVENSEY BAY	1	5					1	2	3	
POLEGATE TOWN 33/11KV		10						10		
RIPE 33/11KV		4						4		
ROBERTSBRIDGE 33KV		6					6			

RYE 33KV		9					9			
SEAFORD			9					3		6
STAPLEHURST 33/6.6KV		6					1	5		
STEEL CROSS 33/6.6KV		4						4		
TICEHURST 33/11KV		7					3	4		
UCKFIELD 33/11KV		8					7	1		
WADHURST 33KV		7						7		
WITTERSHAM 33/6.6KV		4						1	3	

Table 5. EHV Circuit breakers (33kV)

	2015					2024				
Substation	**No. HI1**	**No. HI2**	**No. HI3**	**No. HI4**	**No. HI5**	**No. HI1**	**No. HI2**	**No. HI3**	**No. HI4**	**No. HI5**
ASHFORD GRID 132 KV		4						4		
ASHFORD GRID 33 KV		14	1				2	12	1	
EASTBOURNE GRID 132 KV		2						2		
HARTLEY GRID 132 KV		2					2			
HARTLEY GRID 33KV		7					7			
LEWES GRID 132 KV	2						2			
LEWES GRID 33KV	11						11			
LITTLE CHEYNE	1						1			
NEWHAVEN ERF	3					3				
NEWHAVEN GRID		7	2				1	7	1	
NEWHAVEN GRID 132 KV		2						2		
NINFIELD GRID 132 KV		2						2		
NINFIELD GRID 33KV	9					2	7			
POLEGATE GRID		6	1					7		
POLEGATE GRID 132 KV		2						2		
RUCKINGE GRID 33KV	6					3	3			
RYE GRID 33KV	3						3			

Table 6. 66kV &132kV Circuit Breakers

	2015					2024				
Substation	**No. HI1**	**No. HI2**	**No. HI3**	**No. HI4**	**No. HI5**	**No. HI1**	**No. HI2**	**No. HI3**	**No. HI4**	**No. HI5**
APPLEDORE 132KV SW STATION	3						3			
HASTINGS MAIN 132 KV		1		2	6		1			8
LEWES GRID 132 KV		1	2						1	2
NINFIELD GRID 132 KV	6	3					9			
RUCKINGE GRID 132 KV			1	2						3
RYE GRID 132KV		1					1			

Table 7. Primary Transformers

	2015					2024				
Substation	**No. HI1**	**No. HI2**	**No. HI3**	**No. HI4**	**No. HI5**	**No. HI1**	**No. HI2**	**No. HI3**	**No. HI4**	**No. HI5**
BALDSLOW 33/11KV		2					1	1		
BEXHILL TOWN			2						2	
BROADOAK 33/11KV		2					2			
BUXTED 33/11KV		2					2			
CRANBROOK 33KV		2						2		
CROSSWAYS 33/11KV		2						1	1	
CROWBOROUGH TOWN 33/6.6KV		2						2		
D.W.S. 33/6.6KV		1					1			

EDENBRIDGE 33/11KV		1							1	
GOUDHURST 33KV		2					1	1		
HAILSHAM 33/11KV	1	1					2			
HAMPDEN PARK 33/11KV		1	1					1	1	
HASTINGS LOCAL 132 KV										
HAWKHURST 33KV		2					1	1		
HEADCORN 33/6.6KV		2						2		
HORAM 33/11KV		2					2			
HORSEBRIDGE		2					2			
JARVIS BROOK 33/6.6KV		2					2			
LEWES CENTRAL 33KV		1	1					2		
LEWES TOWN										
LITTLE CHEYNE	1						1			
LITTLE COMMON 33/11KV		2					1	1		
LONGFIELD 33/11KV		2					2			
MARDEN 33/11KV						1				1
MARDEN 33/6.6KV		1					1			
MOUNTFIELD 33KV		2					1	1		
NEWHAVEN TOWN 33KV		1	2					1		2
NEWICK 33/11KV		2						2		
NINFIELD LOCAL						2				2
NORTHIAM 33KV					2					2
OCKLYNGE 33		2						2		
PEACEHAVEN 33KV			2						2	
PEVENSEY BAY		2					2			
POLEGATE TOWN 33/11KV		2					1	1		
RIPE 33/11KV		1					1			
ROBERTSBRIDGE 33KV		2					1	1		
RYE 33KV		2					1	1		
SEAFORD			2						2	
STAPLEHURST 33/6.6KV		1	1				1		1	
STEEL CROSS 33/6.6KV						1				1
TICEHURST 33/11KV		2					2			
UCKFIELD 33/11KV		2						2		
WADHURST 33KV		1	1				1		1	
WITTERSHAM 33/6.6KV		1					1			

Table 8. Grid Transformers

	2015					2024				
Substation	**No. HI1**	**No. HI2**	**No. HI3**	**No. HI4**	**No. HI5**	**No. HI1**	**No. HI2**	**No. HI3**	**No. HI4**	**No. HI5**
EASTBOURNE GRID 132 KV		2		1	1		1	1		2
HARTLEY GRID 132 KV		2					2			
HASTINGS LOCAL 132 KV	1	2			1		2		1	1
HASTINGS MAIN 132 KV		2					2			
LEWES GRID 132 KV			2						1	1
NEWHAVEN GRID 132 KV		2						2		
NINFIELD GRID 132 KV		3					1	2		
POLEGATE GRID 132 KV			1		1			1		1
RUCKINGE GRID 132 KV		2						2		
RYE GRID 132KV			1						1	

All of the cost numbers displayed in this document are before the application of on-going efficiencies and real price effects.

3.2 Security of supply analysis

Table 9. The P2/6 assessments table is detailed below:

Sub-station	Secondary Voltage	Firm Capacity (MW)	Transfer (MW)	Winter 12/13 Summer 2012 (MW)	Winter 13/14 Summer 2013 (MW)	Winter 14/15 Summer 2014 (MW)	Winter 15/16 Summer 2015 (MW)	Winter 16/17 Summer 2016 (MW)	Winter 17/18 Summer 2017 (MW)	Winter 18/19 Summer 2018 (MW)	Winter 19/20 Summer 2019 (MW)	Winter 20/21 Summer 2020 (MW)	Winter 21/22 Summer 2021 (MW)	Winter 22/23 Summer 2022 (MW)
Baldslow	11kV	21.90	11.07	20.18	20.36	20.99	21.65	22.22	22.26	22.31	22.38	22.45	22.74	23.04
Baldslow	11kV	17.28	10.13	16.78	16.93	17.44	17.97	18.43	18.46	18.51	18.56	18.62	18.85	19.09
Bexhill Town	11kV	22.20	0.00	14.27	14.27	14.38	14.52	14.67	14.70	14.74	14.78	14.83	15.02	15.20
Bexhill Town	11kV	18.30	0.00	12.08	12.08	12.17	12.28	12.40	12.43	12.46	12.50	12.54	12.69	12.84
Broadoak Local	11kV	7.92	3.58	8.15	8.15	8.20	8.26	8.33	8.36	8.40	8.44	8.49	8.59	8.70
Broadoak Local	11kV	7.84	0.00	4.73	4.73	4.76	4.80	4.83	4.85	4.87	4.90	4.92	4.98	5.04
Buxted	11kV	11.27	0.93	7.16	7.19	7.28	7.38	7.48	7.51	7.55	7.59	7.63	7.74	7.84
Buxted	11kV	11.30	0.00	3.87	3.89	3.94	3.99	4.05	4.06	4.08	4.10	4.13	4.18	4.24
Cranbrook	11kV	6.24	0.00	4.69	4.74	4.89	5.05	5.19	5.20	5.22	5.24	5.26	5.34	5.42
Cranbrook	11kV	4.60	0.00	3.70	3.74	3.85	3.98	4.08	4.09	4.10	4.12	4.14	4.20	4.26
Eastbourne 132/11	11kV	36.60	0.00	26.07	26.11	26.45	26.84	27.21	27.21	27.24	27.27	27.32	27.61	27.90
Eastbourne 132/11	11kV	28.80	0.00	19.93	19.95	20.21	20.49	20.76	20.76	20.78	20.81	20.84	21.06	21.27
Goudhurst	11kV	13.00	0.00	6.46	6.46	6.48	6.51	6.54	6.57	6.61	6.65	6.69	6.77	6.85
Goudhurst	11kV	9.70	0.00	4.33	4.33	4.34	4.36	4.38	4.40	4.42	4.45	4.47	4.52	4.57
Hailsham	11kV	14.38	4.85	12.79	12.79	12.87	12.96	13.05	13.07	13.10	13.13	13.17	13.28	13.38
Hailsham	11kV	12.92	5.01	8.58	8.58	8.63	8.69	8.75	8.76	8.78	8.81	8.83	8.90	8.97
Hampden Park	11kV	17.40	7.62	19.81	19.76	19.78	19.84	19.92	19.93	19.96	19.98	20.01	20.18	20.34
Hampden Park	11kV	16.00	6.76	14.44	14.39	14.40	14.45	14.50	14.51	14.53	14.54	14.57	14.69	14.80
Hastings Local 11kV	11kV	73.90	3.38	50.23	50.01	49.81	49.71	49.72	49.77	49.84	49.93	50.02	50.45	50.85
Hastings Local 11kV	11kV	73.90	2.76	28.60	28.38	28.18	28.08	28.09	28.11	28.16	28.20	28.25	28.49	28.71
Hawkhurst	11kV	14.10	0.00	8.00	7.96	7.96	7.96	7.97	7.96	7.95	7.95	7.94	7.99	8.03
Hawkhurst	11kV	10.60	0.00	5.71	5.67	5.67	5.67	5.68	5.67	5.66	5.65	5.65	5.68	5.71
Horam	11kV	11.88	0.00	9.65	9.66	9.73	9.81	9.90	9.93	9.97	10.02	10.07	10.19	10.30
Horam	11kV	9.90	0.00	5.84	5.84	5.88	5.93	5.98	6.00	6.03	6.05	6.08	6.15	6.22
Horsebridge	11kV	12.61	0.00	4.59	4.58	4.61	4.66	4.71	4.73	4.76	4.79	4.83	4.91	5.00
Horsebridge	11kV	9.60	0.00	4.77	4.76	4.79	4.84	4.89	4.91	4.94	4.97	5.00	5.08	5.17
Lewes Central	11kV	12.74	0.00	9.51	9.52	9.61	9.73	9.84	9.86	9.89	9.92	9.96	10.08	10.20
Lewes Central	11kV	9.30	0.00	7.16	7.17	7.24	7.33	7.40	7.42	7.44	7.47	7.49	7.58	7.66
Lewes Town	11kV	15.70	2.93	12.27	12.27	12.33	12.40	12.49	12.53	12.58	12.64	12.70	12.84	12.98
Lewes Town	11kV	13.50	1.83	8.13	8.13	8.17	8.22	8.27	8.30	8.33	8.37	8.41	8.50	8.59
Little Common	11kV	22.20	0.00	13.64	13.61	13.65	13.72	13.80	13.83	13.86	13.90	13.94	14.09	14.23
Little Common	11kV	18.60	0.00	8.51	8.48	8.50	8.54	8.59	8.61	8.63	8.65	8.67	8.76	8.85
Marden 33/11	11kV	3.10	1.77	2.86	2.91	3.04	3.18	3.30	3.31	3.33	3.35	3.37	3.42	3.48
Marden 33/11	11kV	2.40	0.00	2.33	2.37	2.47	2.59	2.68	2.69	2.70	2.71	2.73	2.77	2.82
Meads	11kV	21.80	0.00	11.00	11.01	11.13	11.27	11.40	11.41	11.43	11.45	11.48	11.60	11.72
Meads	11kV	18.60	0.00	8.02	8.02	8.11	8.21	8.30	8.30	8.32	8.34	8.36	8.44	8.52
Mountfield	11kV	12.40	1.14	9.30	9.29	9.31	9.35	9.38	9.39	9.41	9.43	9.44	9.50	9.56
Mountfield	11kV	9.50	0.78	9.11	9.11	9.13	9.16	9.19	9.20	9.21	9.23	9.25	9.30	9.35
Newhaven	11kV	16.32	0.00	11.52	11.51	11.52	11.55	11.58	11.58	11.59	11.60	11.61	11.66	11.72
Newhaven	11kV	16.32	0.00	9.66	9.65	9.66	9.68	9.70	9.71	9.71	9.72	9.72	9.77	9.81
Newick	11kV	14.80	0.00	6.43	6.48	6.63	6.81	6.96	7.01	7.06	7.12	7.19	7.33	7.47
Newick	11kV	11.00	0.00	3.43	3.45	3.54	3.63	3.71	3.73	3.76	3.79	3.83	3.90	3.98
Ninfield Local	11kV	6.37	0.00	4.76	4.75	4.75	4.75	4.76	4.74	4.73	4.72	4.70	4.72	4.73
Ninfield Local	11kV	4.75	0.00	2.67	2.65	2.65	2.65	2.65	2.64	2.62	2.61	2.60	2.60	2.61
Northiam	11kV	5.80	0.00	3.80	3.80	3.84	3.88	3.93	3.95	3.97	3.99	4.02	4.08	4.14
Northiam	11kV	4.60	0.00	3.13	3.14	3.16	3.20	3.24	3.25	3.27	3.29	3.31	3.36	3.40
Ocklynge	11kV	22.73	0.00	12.02	11.98	12.01	12.06	12.13	12.14	12.17	12.19	12.22	12.36	12.49
Ocklynge	11kV	19.20	0.00	8.39	8.36	8.38	8.41	8.46	8.47	8.48	8.50	8.52	8.62	8.71
Peacehaven	11kV	21.30	0.00	14.37	14.34	14.37	14.44	14.51	14.53	14.55	14.57	14.59	14.73	14.86
Peacehaven	11kV	19.40	0.00	9.69	9.65	9.68	9.72	9.77	9.77	9.79	9.80	9.81	9.90	9.99
Pevensey Bay	11kV	14.40	3.11	3.56	3.55	3.59	3.64	3.69	3.70	3.72	3.74	3.76	3.82	3.89
Pevensey Bay	11kV	11.00	2.18	2.70	2.70	2.72	2.76	2.80	2.81	2.82	2.83	2.84	2.89	2.94
Polegate Town	11kV	22.40	0.00	10.67	10.64	10.68	10.74	10.81	10.83	10.87	10.90	10.94	11.08	11.22
Polegate Town	11kV	16.04	0.00	6.61	6.58	6.60	6.63	6.68	6.69	6.71	6.74	6.76	6.84	6.93
Ripe	11kV	5.60	3.49	4.65	4.66	4.70	4.76	4.81	4.82	4.85	4.87	4.90	4.96	5.02
Ripe	11kV	4.00	2.38	3.05	3.06	3.09	3.12	3.15	3.16	3.18	3.19	3.21	3.25	3.28
Robertsbridge	11kV	13.50	0.00	2.99	3.00	3.03	3.07	3.12	3.13	3.15	3.18	3.20	3.26	3.31
Robertsbridge	11kV	10.40	0.00	1.60	1.60	1.62	1.64	1.66	1.67	1.68	1.70	1.71	1.74	1.77
Rye	11kV	12.61	4.44	10.55	10.53	10.53	10.54	10.57	10.59	10.63	10.66	10.70	10.80	10.89
Rye	11kV	9.80	4.07	8.30	8.28	8.27	8.28	8.30	8.32	8.35	8.37	8.40	8.47	8.54
Seaford	11kV	22.86	0.00	14.30	14.27	14.32	14.41	14.51	14.54	14.58	14.62	14.67	14.84	15.02
Seaford	11kV	19.80	0.00	9.93	9.90	9.93	9.99	10.06	10.08	10.10	10.13	10.16	10.28	10.39
Ticehurst	11kV	12.74	0.00	4.92	4.93	4.99	5.05	5.11	5.13	5.15	5.18	5.20	5.27	5.34
Ticehurst	11kV	9.70	0.00	4.02	4.03	4.07	4.12	4.17	4.18	4.20	4.22	4.24	4.30	4.35
Uckfield	11kV	12.70	8.29	13.38	13.42	13.60	13.81	13.99	14.02	14.06	14.10	14.15	14.30	14.45
Uckfield	11kV	9.50	6.91	8.55	8.58	8.69	8.82	8.93	8.95	8.97	9.00	9.03	9.12	9.22

All of the cost numbers displayed in this document are before the application of on-going efficiencies and real price effects.

Table 10. Substations LI profile (without investment)

Substation	Primary Voltage	Secondary Voltage	Load Index ranking (2015 starting point)	Load Index ranking (2023 without intervention)
Substation Name	(kV)	(kV)	LI1 - LI5	LI1 - LI5
Baldslow	132	11	LI5	LI5
Bexhill Town	33	11	LI1	LI1
Broadoak Local	33	11	LI1	LI1
Buxted	33	11	LI1	LI1
Cranbrook	33	11	LI2	LI2
Crowborough Town	33	6.6	LI2	LI2
D.W.S.	33	6.6	LI2	LI2
Eastbourne 132/11	132	11	LI1	LI1
Eastbourne 132/33	132	33	LI1	LI1
Goudhurst	33	11	LI1	LI1
Hailsham	33	11	LI2	LI2
Hampden Park	33	11	LI2	LI2
Hartley Grid	132	33	LI1	LI1
Hastings 132/33	132	33	LI1	LI1
Hastings Local 11kV	132	11	LI1	LI1
Hawkhurst	33	11	LI1	LI1
Headcorn	33	6.6	LI1	LI1
Horam	33	11	LI2	LI2
Horsebridge	33	11	LI1	LI1
Jarvis Brook	33	6.6	LI1	LI1
Lewes Central	33	11	LI1	LI2
Lewes Grid	132	33	LI2	LI2
Lewes Town	33	11	LI1	LI2
Little Common	33	11	LI1	LI1
Marden Total	33	11	LI3	LI5
Meads	33	11	LI1	LI1
Mountfield	33	11	LI3	LI3
Newhaven	33	11	LI1	LI1
Newhaven Grid	132	33	LI1	LI1
Newick	33	11	LI1	LI1
Ninfield Grid	132	33	LI1	LI1
Ninfield Local	33	11	LI1	LI1
Northiam	33	11	LI1	LI1
Ocklynge	33	11	LI1	LI1
Peacehaven	33	11	LI1	LI1
Pevensey Bay	33	11	LI1	LI1
Polegate Grid	132	33	LI1	LI1
Polegate Town	33	11	LI1	LI1
Ripe	33	11	LI2	LI2
Robertsbridge	33	11	LI1	LI1
Ruckinge Grid	132	33	LI1	LI1
Rye	33	11	LI2	LI2
Rye Grid	132	33	LI1	LI1
Seaford	33	11	LI1	LI1

Staplehurst	33	6.6	LI1	LI1
Steel Cross	33	6.6	LI1	LI1
Ticehurst	33	11	LI1	LI1
Uckfield	33	11	LI5	LI5
Wadhurst	33	6.6	LI5	LI5
Wittersham	33	6.6	LI1	LI2

3.3 Operational and technical constraints

No operational restrictions have been identified.

3.4 National Grid

There are no known significant projects being undertaken by National Grid that will affect the substations referenced in this RDP.

3.5 Network Constraints

Locations where an incident can cause complete or partial loss of a substation (such as cable bridges, cable tunnels or railway crossings) have been looked at. No such location has been identified in this area.

3.6 Smart Demand Response

No site has been identified as suitable for implementation of Demand Side Response (DSR) in ED1 in this area.

4 Recommended strategy

The network strategy for Ninfield is designed to ensure:

- Continued adherence to the security of supply criteria defined in Engineering Recommendation P2/6
- Maintaining reliable network operation by asset replacement, or refurbishment, of selected equipment identified through asset condition monitoring (HI) techniques

With the exception of the 132kV double circuit interconnection between Barking and Brunswick Wharf adopting this framework results in no major network reconfigurations.

The proposals are summarised below:

4.1 Proposed interventions

The most significant intervention involves the asset replacement of the south coast 132kV overheadline route PO between Lewes and Eastbourne shown in Figure 2 below:

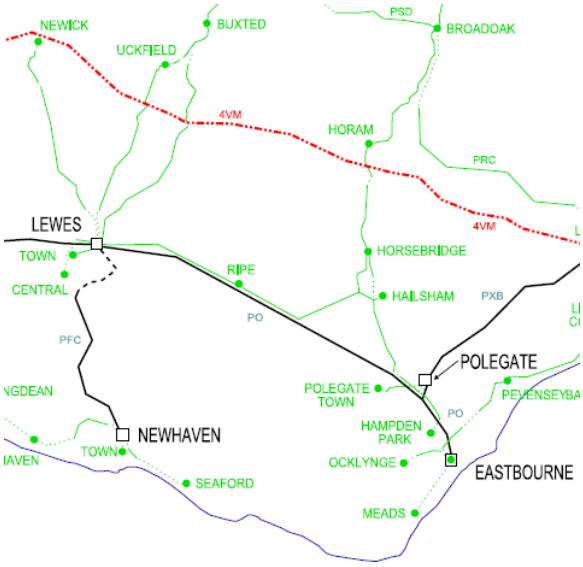

Figure 3. Lewes – Eastbourne PO Route

The route is 22km in length comprising of 86 single circuit towers. Condition surveys have confirmed the need to asset replace the majority of towers along the route.

Furthermore, due to incremental demand growth it will be necessary to rebuild the line as a double circuit to maintain compliance with Engineer Recommendation P2/6 for security of supply.

The route runs parallel to the south coast and traverses the South Downs National Park with the principal delivery risks including wayleave negotiations and obtaining planning permission. Investigations are in progress to utilise insulated cross-arm new technology to lower the line profile but, based on recent experience, renegotiating permissions to rebuild this route is considered to have a low probability of success.

As an alternative, negotiations are in progress with National Grid to establish a new supergrid exit at Little Horsted adjacent to their existing 400kV overhead line. A feasibility study has been undertaken confirming the viability of the strategy with a commissioning date of October 2019. In addition to removing the need to replace the tower line, an exit point would provide sufficient capacity to the Newhaven-Lewes group into the foreseeable future and avoid the need to reinforce the adjacent Bolney and Ninfield supergrid exit points. The estimated total cost of the project, including a 7km double circuit cable route between Little Horsted and Lewes is £38.5m

Broadoak Group 33kV Reinforcement The predicted load of Broadoak 33kV group (Broadoak and Crowborough 33kV Switicing Station) will exceed the thermal rating of the associated 33kV circuits mainly due to growth of Crowborough Town load. It is proposed to increase firm capacity at Broadoak 33kV Switching

Station by establishing a new 132/33kV site at Broadoak comprising 2 x 60 MVA transformers supplied by the PRC circuits from Ninfield and a new 10 panel indoor 33kV switchboard

3096 - Marden Tee 132kV Switchboard Construction: This project is required to enhance N-2 P2/6 support to the Tunbridge Wells Grid/Pembury group and Hartley Grid 132kV networks, and improve network operational flexibility and safety performance. Currently Northfleet East GSP and Ninfield GSP's are separated through broken jumpers at Hartley Grid and Marden Tee, which will require manual intervention in remaking the jumpers in the event of a power loss on either GSP in order to provide back feed supplies. It is therefore proposed to construct a new switching station at Marden tee-point in order to improve network operational flexibility, safety performance and enhance N-2 P2/6 support on this critical 132kV network. The double 132kV circuit from Northfleet East GSP to Marden Tee runs across the lightning prone Medway Valley, which puts the network at risk of double circuit power losses thereby putting a substantial number of customers at risk. Manual remaking of jumpers, mobilisation of resources and switching requirements will take up to 6hrs and potential breaches of N-2 P2/6 compliance.

8117, 8118, and 8119 - Marden 33kV/6.6kV - Replace T1, T2 & T3 with 7.5/15MVA units: The predicted load at Marden is due to exceed the existing firm capacity by 2016. It is not possible to lower the load without compromising operational and planning requirements. At present there is 3MVA of demand transfer available; however this is predicted to diminish over the next couple of years due to voltage constraints outside statutory limits. It is proposed to increase the transformer capacity by replacing the existing 5MVA 33/11kV, 33/6.6kV and 11/6.6kV transformers with new 7.5/15MVA units.

3095 - Hastings Main - 132kV Capacitor Banks: This project recommends installing reactive power compensation at Hastings Main 132/33kV substation to sustain the voltage profile within operational limits during abnormal running arrangements when Hastings is fed from Northfleet East once the remote switching facilities and circuit modifications being provided under the Project 3096 (Marden Tee 132 kV Switchboard) are implemented. According to load flow studies carried out based on existing maximum load and abnormal running arrangements a voltage drop of 24% (at maximum tap) is recorded, which is outside acceptable operational limits. It is therefore proposed to install a capacitor bank on the existing132kV busbar in order to sustain voltage from circa 24% voltage drop at maximum tap position to within statutory limits (+/-10%).

8125 - Uckfield 33kV/11kV Reinforcement - Replace 2 x 10 MVA transformers with 2 x 12/24 MVA units: The predicted load at Uckfield has exceeded the existing firm capacity in winter 2012/13. It is not possible to lower the load without compromising operational requirements, with the limiting factor being the CER winter rating of the two transformers. It is proposed to increase the transformer capacity by replacing the existing 10MVA transformers with two new 12/24MVA units. The available post fault transfers are expected to diminish such that P2/6 compliance cannot be maintained in ED2, hence the need for the project. DSR has not been considered due to the predominately residential and commercial retail consumers.

8126 - Wadhurst 33kV/6.6kV Reinforcement - Replace T2 with 7.5 MVA 33/6.6kV Unit: The demand at Wadhurst is predicted to exceed existing firm capacity winter 2015/16. It is not possible to reduce the load without compromising operational and planning requirements. It is therefore proposed to increase the firm capacity by replacing the 5MVA T2 with a new 33/6.6kV 7.5 MVA transformer.

8123 - Ripe 33kV/11kV Reinforcement - Replace T1 and add T2: The predicted load at Ripe 33kV/11kV will exceed the existing firm capacity; including the available transfer capacity. It is not possible to lower the load without compromising operational and planning requirements. It is therefore proposed to increase transformer capacity by replacing the existing 5MVA single transformer with a 10MVA unit and installing a 2nd 10MVA transformer to be supplied by the 33kV Tee connected Lewes Polegate (No.2) 33kV circuit. In addition, 2 panels of 11kV switchboard will be installed to accommodate the new transformer arrangement.

All of the cost numbers displayed in this document are before the application of on-going efficiencies and real price effects.

4.2 Costs and phasing

Table 11. Details of the projects proposed for ED1

All of the cost numbers displayed in this document are before the application of on-going efficiencies and real price effects.

SR_Table J		S&R - Baseline_Final ED1 Re-submission_19th													
Cat	GWPID	Namp Line	Project ID	Description	2015/2016	2016/2017	2017/2018	2018/2019	2019/2020	2020/2021	2021/2022	2022/2023	2023/2024	2024/2025
A	1.02	1.02.03	4123	PUA - Ninfield - Hastings Main - Conductor Replacement	0	0	0	0	0	184	470	0	0	0
A	1.02	1.02.03	3318	PO - Route Replacement Strategy	5,170	6,275	6,201	5,753	4,752	2,834	0	0	0	0
A	1.50	1.50.01	7827	Little Common 33/11kV - Replace 11kV Switchgear	0	0	0	0	243	611	0	0	0	0
A	1.51	1.51.01	4132	Eastbourne Grid 132 kV Replace GT1B and GT2B	0	0	587	1,956	689	0	0	0	0	0
A	1.50	1.50.01	4154	Ocklynge Primary - Replace 11kV Switchgear	0	571	1,565	0	0	0	0	0	0	0
A	1.50	1.50.01	7829	Meads - Retrofit 11kV Switchgear	0	0	0	0	0	78	89	0	0	0
A	1.51	1.51.11	7896	Lewes Grid 132kV - Refurbish Grid Transformer (GT1, GT2)	0	0	0	0	0	0	0	176	125	0
A	1.07	1.07.07	8399	Southern Cross to Lewes 132kV: Replace 132kV Gas Cable Section Between Southern Cross-Mile Oak	0	0	0	0	139	555	416	0	0	0
A	1.02	1.02.03	5540	PLB - Lewes/Southern Cross - Tower Refurbishment	0	0	0	0	0	0	0	0	0	0
A	1.02	1.02.03	7963	PLB - Lewes - Southern Cross - Insulator and Fittings Replacement	0	0	0	104	164	0	0	0	0	0
A	1.09	1.09.01	8172	100913013 - 33kV Lewes Grid/Lewes Town No2 - OHLReplacement	0	0	24	44	0	0	0	0	0	0
A	1.09	1.09.01	8174	100913012 - 33kV Lewes Grid/Lewes Town No1 - OHLReplacement	54	14	0	0	0	0	0	0	0	0
A	1.50	1.50.01	7933	Newick 33/11kV - Retrofit 11kV Switchgear	0	0	0	0	0	0	39	32	0	0
A	1.51	1.51.03	7897	Newhaven Town 33kV - Replace Primary Transformer (T2)	0	0	0	0	0	0	97	754	0	0
A	1.50	1.50.01	7843	Seaford - Replace 11kV Switchgear	230	570	0	0	0	0	0	0	0	0
A	1.50	1.50.01	7837	Peacehaven 33kV - Retrofit 11kV Switchgear	0	0	0	0	0	66	54	0	0	0
A	1.26	1.26.10	5286	BT21CN Mitigation - Hastings Main/Hartley	24	216	0	20	177	0	0	0	0	0
A	1.26	1.26.10	5295	BT21CN Mitigation - Lewes/Newhaven	124	1,112	0	0	0	0	0	0	0	0
A	1.26	1.26.10	5309	BT21CN Mitigation - Polegate/Eastbourne	54	488	0	0	0	0	0	0	0	0
A	1.26	1.26.10	7991	BT21CN Mitigation - 33kV Rye 33kV To Northiam	60	179	0	0	0	0	0	0	0	0
A	1.26	1.26.10	7992	BT21CN Mitigation - 33kV Rye 33kV To Tenterden	60	179	0	0	0	0	0	0	0	0
A	1.51	1.51.03	4140	Ninfield Local - Replace T1 and T2	110	730	261	0	0	0	0	0	0	0
A	1.02	1.02.03	4376	PCA Reinforcment - Northfleet East - Hartley - on wrong line	0	0	437	1,747	1,310	0	0	0	0	0
A	1.02	1.02.03	7959	PNB - Hartley to Hastings Main - Conductor Replacement	0	700	1,947	0	0	0	0	0	0	0
A	1.02	1.02.03	7975	PCA - Northfleet East to Hartley - Insulator and Fittings Replacement	604	0	0	0	0	0	0	0	0	0
A	1.09	1.09.01	8169	SPN - 100912202 - 33kV Hartley Grid/Goudhurst - OHLReplacement	0	0	0	0	79	91	0	0	0	0
A	1.50	1.50.01	7931	Goudhurst - Replace 11kV Switchgear	0	0	0	0	0	0	0	228	564	0
A	1.51	1.51.03	7908	Steel Cross 33/6.6kV - Replace Primary Transformer (T2)	491	0	0	0	0	0	0	0	0	0
A	1.02	1.02.03	7977	PBA - Tunbridge Wells - Marden Junction - Conductor Replacement	0	0	0	255	611	0	0	0	0	0
A	1.50	1.50.01	7820	Wittersham 33/6.6kV - Replace 6.6kV Switchgear	0	0	0	0	0	0	0	216	528	0
A	1.51	1.51.03	4134	Northiam 33kV - Replace T1 and T2	0	0	0	0	0	228	730	142	0	0
A	1.50	1.50.01	7921	Broadoak - Retrofit 11kV Switchgear	0	0	0	0	0	40	0	0	0	0
A	1.48	1.48.06	3284	Hastings Main - 132kV Switchboard Replacement	807	2,924	2,925	2,195	0	0	0	0	0	0
A	1.51	1.51.01	5461	Hastings Local NWR 132/33kV Transformer Replacement (GT2C)	0	0	0	0	0	0	0	0	0	0
A	1.51	1.51.01	7903	Rye Grid 132kV - Replace Grid Transformer (GT1)	0	0	0	0	0	0	78	1,408	0	0
R	1.33	1.33.01	8125	Uckfield 33kV/11kV Reinforcement - Replace 2 x 10 MVA with 2 x 12/24 MVA PTxs	519	0	0	0	0	0	0	0	0	0
R	1.33	1.33.01	8123	Ripe 33kV/11kV Reinforcement - Replace T1 with a 7.5/15MVA and add T2 as a 7.5/15MVA	232	547	699	0	0	0	0	0	0	0
R	1.33	1.33.01	8126	Wadhurst 33kV/6.6kV Reinforcement - Replace T2 with 7.5 MVA 33/6.6kV Unit	108	0	0	0	0	0	0	0	0	0
R	1.33	1.33.01	8117	Marden 33kV/11kV - Replace T1 with 7.5/15 MVA unit	218	0	0	0	0	0	0	0	0	0
R	1.33	1.33.01	8118	Marden 33kV/6.6kV - Replace T2 with 7.5/15MVA unit	0	0	0	0	0	36	172	262	232	0
R	1.33	1.33.01	8119	Marden Total 11kV/6.6kV - Replace auto tx with 7.5/15 MVA unit	43	194	255	274	0	0	0	0	0	0
R	1.36	1.36.01	3096	Marden Tee 132kV Switchboard	919	2,039	1,652	0	0	0	0	0	0	0
R	1.35	1.35.01	8112	Broadoak Group 33kV Reinforcement- Establish a New 132/33kV Grid	804	2,704	1,903	0	0	0	0	0	0	0
R	1.35	1.35.05	3095	Hastings Main - 132kV Capacitor Banks	345	0	0	0	0	0	0	0	0	0
R	1.33	1.33.01	8111	Baldslow 33kV/11kV Reinforcement - Replace T1/T2 with 20/40 MVA Units & 10 Panel 11kV SWB	574	0	0	0	0	0	0	0	0	0

All of the cost numbers displayed in this document are before the application of on-going efficiencies and real price effects.

4.3 HI / LI Improvement

The following tables set out the improvements in HI and LIs following planned intervention during the remainder of DPCR5 and ED1.

4.3.1 HI Improvement

Table 12. HV Circuit Breakers

Substation	2015					2023 with Intervention				
	No. HI1	**No. HI2**	**No. HI3**	**No. HI4**	**No. HI5**	**No. HI1**	**No. HI2**	**No. HI3**	**No. HI4**	**No. HI5**
BALDSLOW 33/11kV		10					4	6		
BEXHILL TOWN		9	3					12		
BROADOAK 33/11kV		5	2				5	2		
BUXTED 33/11kV		7						7		
CRANBROOK 33kV		6					1	5		
CROWBOROUGH TOWN 33/6.6kV		7					3	4		
D.W.S. 33/6.6kV	1	3					1	3		
EASTBOURNE GRID 132/11kV		12					12			
GOUDHURST 33kV		6	2					8		
HAILSHAM 33/11kV		8						8		
HAMPDEN PARK 33/11kV	1	8					1	8		
HASTINGS LOCAL 132/11kV		24					7	17		
HAWKHURST 33kV		7					7			
HEADCORN 33/6.6kV		8						8		
HORAM 33/11kV		3	5					8		
HORSEBRIDGE		7						7		
JARVIS BROOK 33/6.6kV		6					6			
LEWES CENTRAL 33kV		10					10			
LEWES TOWN		11					3	8		
LITTLE COMMON 33/11kV		2	10			12				
MARDEN 33/11kV		4					4			
MARDEN 33/6.6kV		4					4			
MEADS 33/11kV		3	8				11			
MOUNTFIELD 33kV		3	4					7		
NEWHAVEN TOWN 33kV	1	11					2	10		
NEWICK 33/11kV		3	5					8		
NINFIELD LOCAL		3	3					6		
NORTHIAM 33kV		7						7		
OCKLYNGE 33		1	11			12				
PEACEHAVEN 33kV	2		8				10			
PEVENSEY BAY	1	5					1	5		
POLEGATE TOWN 33/11kV		10						10		
RIPE 33/11kV		4						4		
ROBERTSBRIDGE 33/11kV		6					6			
RYE 33/11kV		9					9			
SEAFORD			9			9				
STAPLEHURST 33/6.6kV		6					1	5		
STEEL CROSS 33/6.6kV		4					1	3		
TICEHURST 33/11kV		7					3	4		
UCKFIELD 33/11kV		8					7	1		
WADHURST 33kV		7					1	6		
WITTERSHAM 33/6.6kV		4						4		

Table 13. EHV Circuit Breakers

Substation	2015					2023 with Intervention				
	No. HI1	No. HI2	No. HI3	No. HI4	No. HI5	No. HI1	No. HI2	No. HI3	No. HI4	No. HI5
EASTBOURNE GRID		8					8			
EASTBOURNE GRID 132 kV		2						2		
HARTLEY GRID 132 kV		2					2			
HARTLEY GRID 33kV		7					7			
LEWES GRID 132 kV	2					2				
LEWES GRID 33kV	11					11				
LITTLE CHEYNE	1					1				
NEWHAVEN ERF	3					3				
NEWHAVEN GRID		7	2				1	8		
NEWHAVEN GRID 132 kV		2						2		
NINFIELD GRID 132 kV		2						2		
NINFIELD GRID 33kV	9					9				
POLEGATE GRID		7						7		
POLEGATE GRID 132 kV		2						2		
RUCKINGE GRID 33kV	6					6				
RYE GRID 33kV	3						3			

Table 14. 132kV Circuit Breakers

Substation	2015					2023 with Intervention				
	No. HI1	No. HI2	No. HI3	No. HI4	No. HI5	No. HI1	No. HI2	No. HI3	No. HI4	No. HI5
APPLEDORE 132kV SW STATION	3						3			
HASTINGS MAIN 132 kV		1		7	1	9				
LEWES GRID 132 kV		1	2						3	
NINFIELD GRID 132 kV	9						9			
RUCKINGE GRID 132 kV			1	2						3
RYE GRID 132kV		2					2			

Table 15. Primary Transformers

Substation	2015					2023 with Intervention				
	No. HI1	No. HI2	No. HI3	No. HI4	No. HI5	No. HI1	No. HI2	No. HI3	No. HI4	No. HI5
BALDSLOW 33/11kV		2					1	1		
BEXHILL TOWN			2					1	1	
BROADOAK 33/11kV		2					2			
BUXTED 33/11kV		2					2			
CRANBROOK 33kV		2					1	1		
CROWBOROUGH TOWN 33/6.6kV		2					1	1		
D.W.S. 33/6.6kV		1					1			
GOUDHURST 33kV		2					1	1		
HAILSHAM 33/11kV	1	1					2			
HAMPDEN PARK 33/11kV		2						2		
HASTINGS LOCAL 132 kV	1	2			5	1	3			
HAWKHURST 33kV		2					2			
HEADCORN 33/6.6kV		2						3		
HORAM 33/11kV		2					2			
HORSEBRIDGE		2						3		
JARVIS BROOK 33/6.6kV		2					2			
LEWES CENTRAL 33kV		1	1					3		
LEWES TOWN	2						2			
LITTLE CHEYNE	1						2			
LITTLE COMMON 33/11kV		2					1	1		
MARDEN 33/11kV					1					1
MARDEN 33/6.6kV		1					1			
MEADS			2					2		
MOUNTFIELD 33kV		2					1	1		
NEWHAVEN TOWN 33kV			3			1		1	1	

All of the cost numbers displayed in this document are before the application of on-going efficiencies and real price effects.

Substation	2015					2023 with Intervention				
	No. HI1	No. HI2	No. HI3	No. HI4	No. HI5	No. HI1	No. HI2	No. HI3	No. HI4	No. HI5
NEWICK 33/11kV		2						2		
NINFIELD LOCAL					2	2				
NORTHIAM 33kV				2		2				
OCKLYNGE 33		2						2		
PEACEHAVEN 33kV			2					2		
PEVENSEY BAY		2					2			
POLEGATE TOWN 33/11kV		2					2			
RIPE 33/11kV		1						1		
ROBERTSBRIDGE 33kV		2					1	1		
RYE 33kV		2					1	1		
SEAFORD			2					2		
STAPLEHURST 33/6.6kV		2					2			
STEEL CROSS 33/6.6kV					1	1				
TICEHURST 33/11kV		2					2			
UCKFIELD 33/11kV		2						3		
WADHURST 33kV		1	1				1		1	
WITTERSHAM 33/6.6kV		1					1			

Substation	2015					2023 with Intervention				
	No. HI1	No. HI2	No. HI3	No. HI4	No. HI5	No. HI1	No. HI2	No. HI3	No. HI4	No. HI5
EASTBOURNE GRID 132 kV		2		2		2	1	1		
HARTLEY GRID 132 kV		2					2			
HASTINGS LOCAL 132 kV	1	3			1	1	3	1		
HASTINGS MAIN 132 kV		2					2			
LEWES GRID 132 kV		1	1					2		
NEWHAVEN GRID 132 kV		2						2		
NINFIELD GRID 132 kV		3						3		
POLEGATE GRID 132 kV			1		1			1		1
RYE GRID 132kV			1			1				

Table 16. Grid Transformers

4.3.2 LI Improvement (with and without intervention)

Table 17. LI Improvement

Substation	Primary Voltage	Secondary Voltage	Load Index ranking (2015 starting point)	Load Index ranking (2023 with intervention)
Substation Name	(kV)	(kV)	LI1 - LI5	LI1 - LI5
Baldslow	132	11	LI5	LI2
Bexhill Town	33	11	LI1	LI1
Broadoak Local	33	11	LI1	LI1
Buxted	33	11	LI1	LI1
Cranbrook	33	11	LI2	LI2
Crowborough Town	33	6.6	LI2	LI1
D.W.S.	33	6.6	LI2	LI2
Eastbourne 132/11	132	11	LI1	LI1
Eastbourne 132/33	132	33	LI1	LI1
Goudhurst	33	11	LI1	LI1
Hailsham	33	11	LI2	LI2
Hampden Park	33	11	LI2	LI2
Hartley Grid	132	33	LI1	LI1
Hastings 132/33	132	33	LI1	LI1

All of the cost numbers displayed in this document are before the application of on-going efficiencies and real price effects.

Hastings Local 11kV	132	11	LI1	LI1
Hawkhurst	33	11	LI1	LI1
Headcorn	33	6.6	LI1	LI1
Horam	33	11	LI2	LI2
Horsebridge	33	11	LI1	LI1
Jarvis Brook	33	6.6	LI1	LI1
Lewes Central	33	11	LI1	LI2
Lewes Grid	132	33	LI2	LI2
Lewes Town	33	11	LI1	LI2
Little Common	33	11	LI1	LI1
Marden Total	33	11	LI3	LI5
Meads	33	11	LI1	LI1
Mountfield	33	11	LI3	LI1
Newhaven	33	11	LI1	LI1
Newhaven Grid	132	33	LI1	LI1
Newick	33	11	LI1	LI1
Ninfield Grid	132	33	LI1	LI1
Ninfield Local	33	11	LI1	LI1
Northiam	33	11	LI1	LI1
Ocklynge	33	11	LI1	LI1
Peacehaven	33	11	LI1	LI1
Pevensey Bay	33	11	LI1	LI1
Polegate Grid	132	33	LI1	LI1
Polegate Town	33	11	LI1	LI1
Ripe	33	11	LI2	LI1
Robertsbridge	33	11	LI1	LI1
Ruckinge Grid	132	33	LI1	LI1
Rye	33	11	LI2	LI2
Rye Grid	132	33	LI1	LI1
Seaford	33	11	LI1	LI1
Staplehurst	33	6.6	LI1	LI1
Steel Cross	33	6.6	LI1	LI1
Ticehurst	33	11	LI1	LI1
Uckfield	33	11	LI5	LI1
Wadhurst	33	6.6	LI5	LI1
Wittersham	33	6.6	LI1	LI2

5 References

References	Description
Reference 1	Planning Load Estimates SPN Area 2012 – 2023 (February 2013)
Reference 2	SPN 132kV System Diagram East
Reference 3	SPN 132kV System Diagram West
Reference 4	SPN LTDS Network Schematics
Reference 5	NAMP SPN Table J Less Ind 5th June 2013

5.1 Appendices

Appendix	Description
Appendix A	Geographical diagram
Appendix B-H	Single Line Diagrams – Existing Network and Recommended Strategy

5.2 Document History

Version	Date of Issue	Author	Details
2.4	28/02/2014	SJE	Updated following RDP review

All of the cost numbers displayed in this document are before the application of on-going efficiencies and real price effects.

6 Document sign off

Sign-off of this Mandate certifies that the Sponsor has ratified the above and approval is sought to proceed to the development of the necessary PG&C Gate B documentation.

Recommended by:

Name	Role	Signature	Date
Chris Winch	Infrastructure Planner	Chris Winch	
Tendai Matiringe	IDP Coordinator (EPN/LPN/SPN)	Tendai Matiringe	
Chris Winch	Planning Manager (North / South)	Chris Winch	

Approval by:

Name	Role	Signature	Date
Robert Kemp	Head of System Development	Robert Kemp	
Barry Hatton	Director of Asset Management	Barry Hatton	

APPENDIX A: GEOGRAPHICAL DIAGRAM

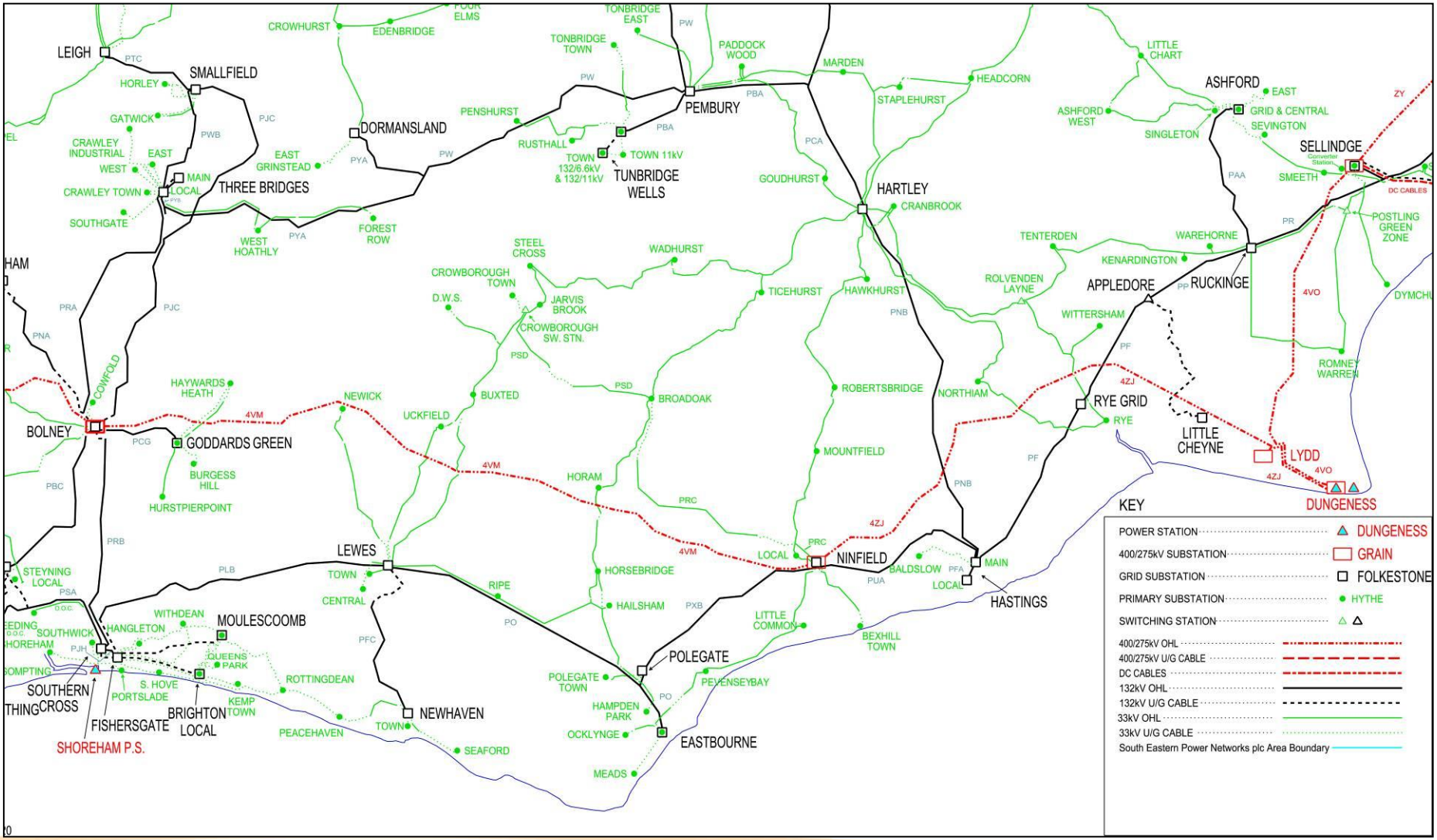

Ninfield

APPENDIX B: SINGLE LINE DIAGRAM – EXISTING NETWORK

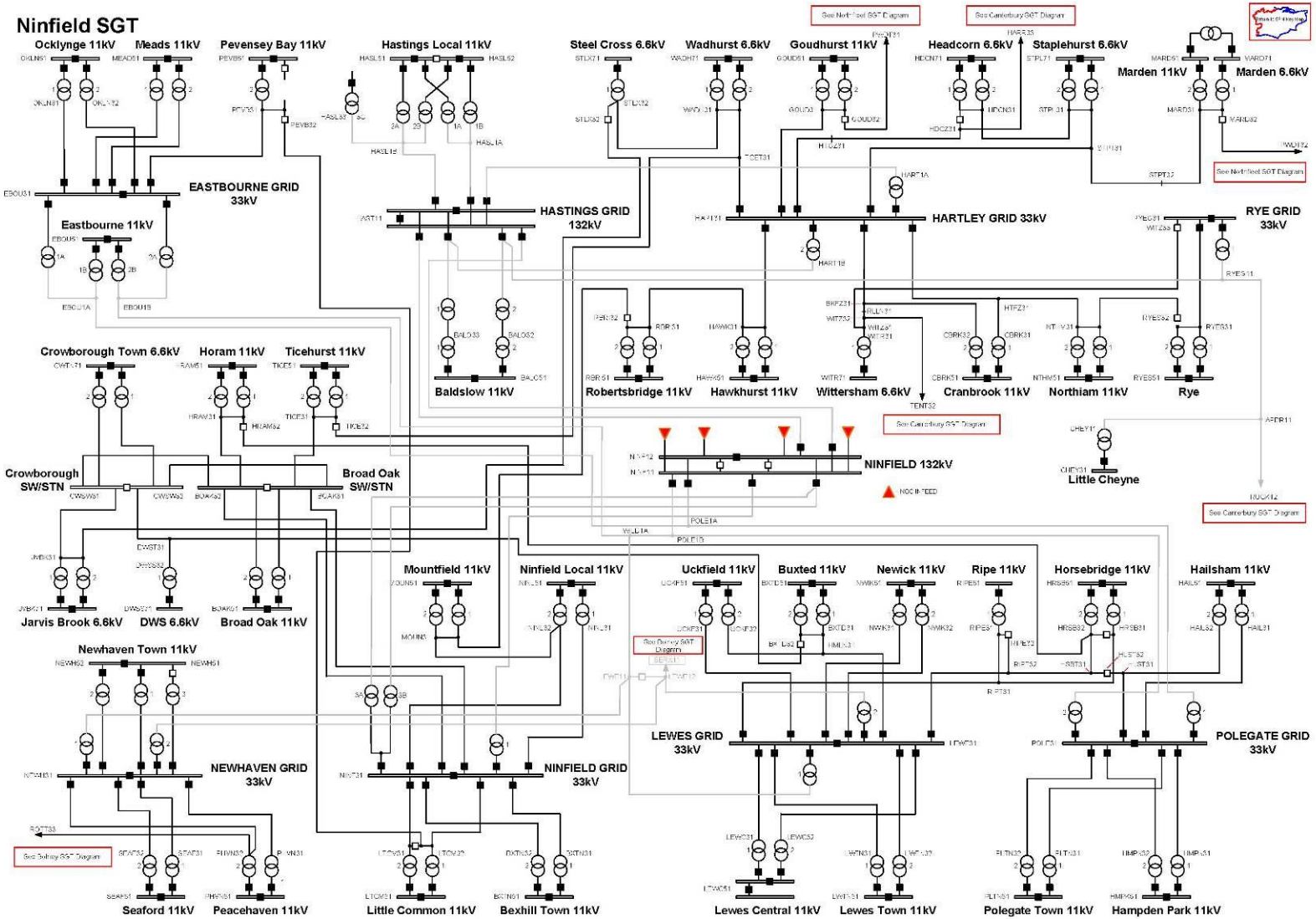

APPENDIX C: SINGLE LINE DIAGRAM – RECOMMENDED STRATEGY (132KV NETWORK)

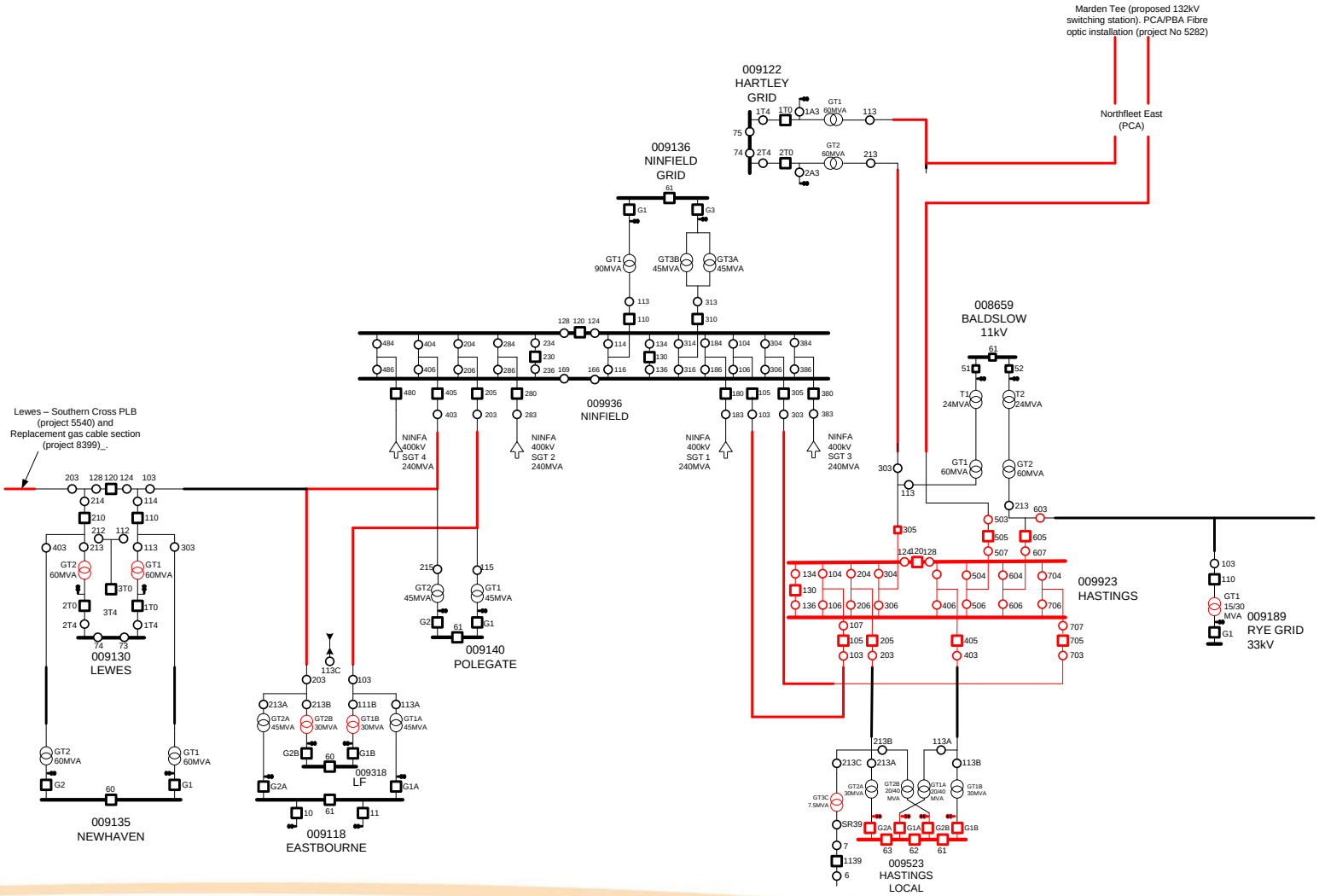

Ninfield

APPENDIX D: SINGLE LINE DIAGRAM RECOMMENDED STRATEGY (33KV NETWORK - HARTLEY)

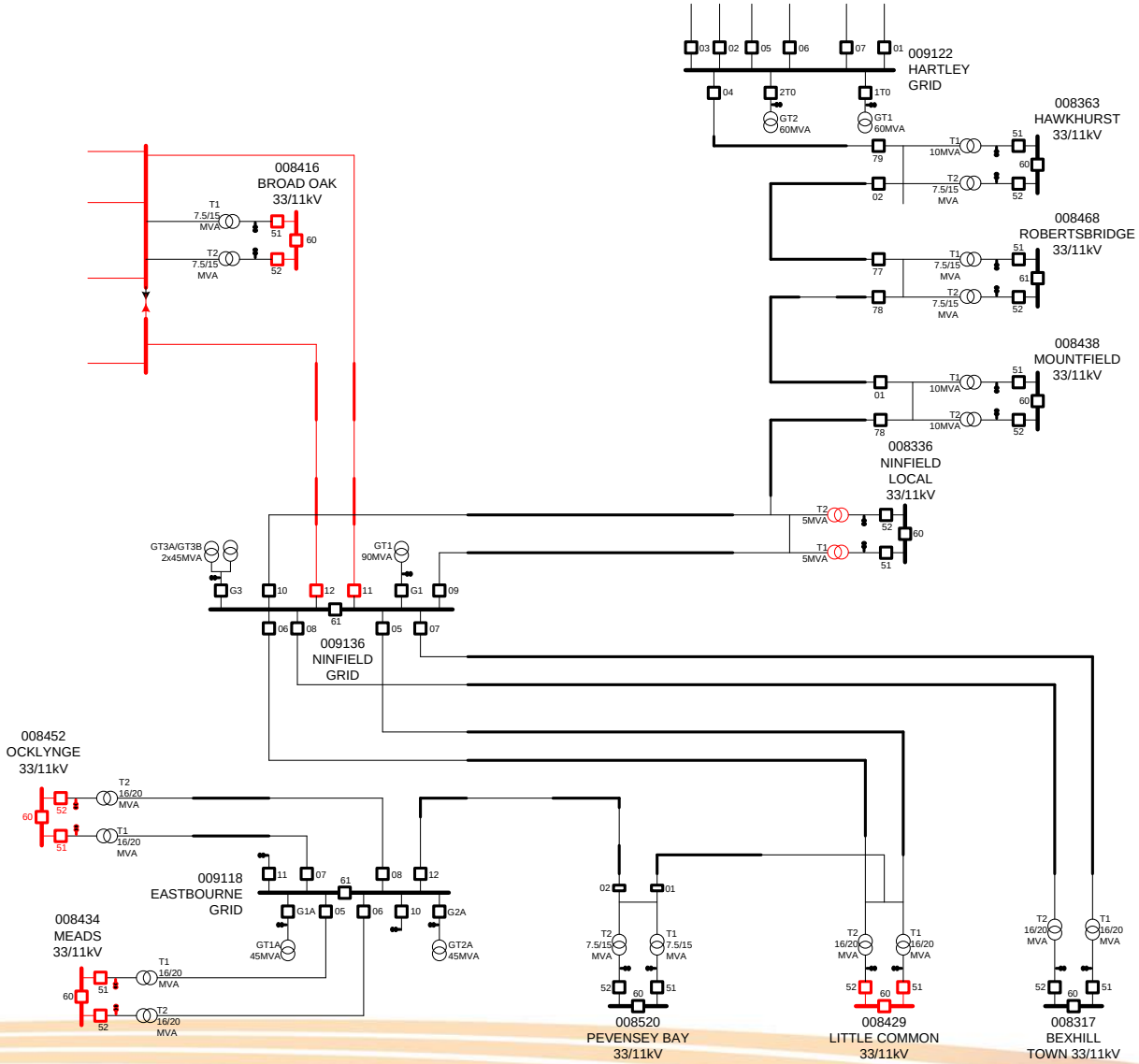

APPENDIX E: SINGLE LINE DIAGRAM – RECOMMENDED STRATEGY (33KV NETWORK – HARTLEY - PEMBURY)

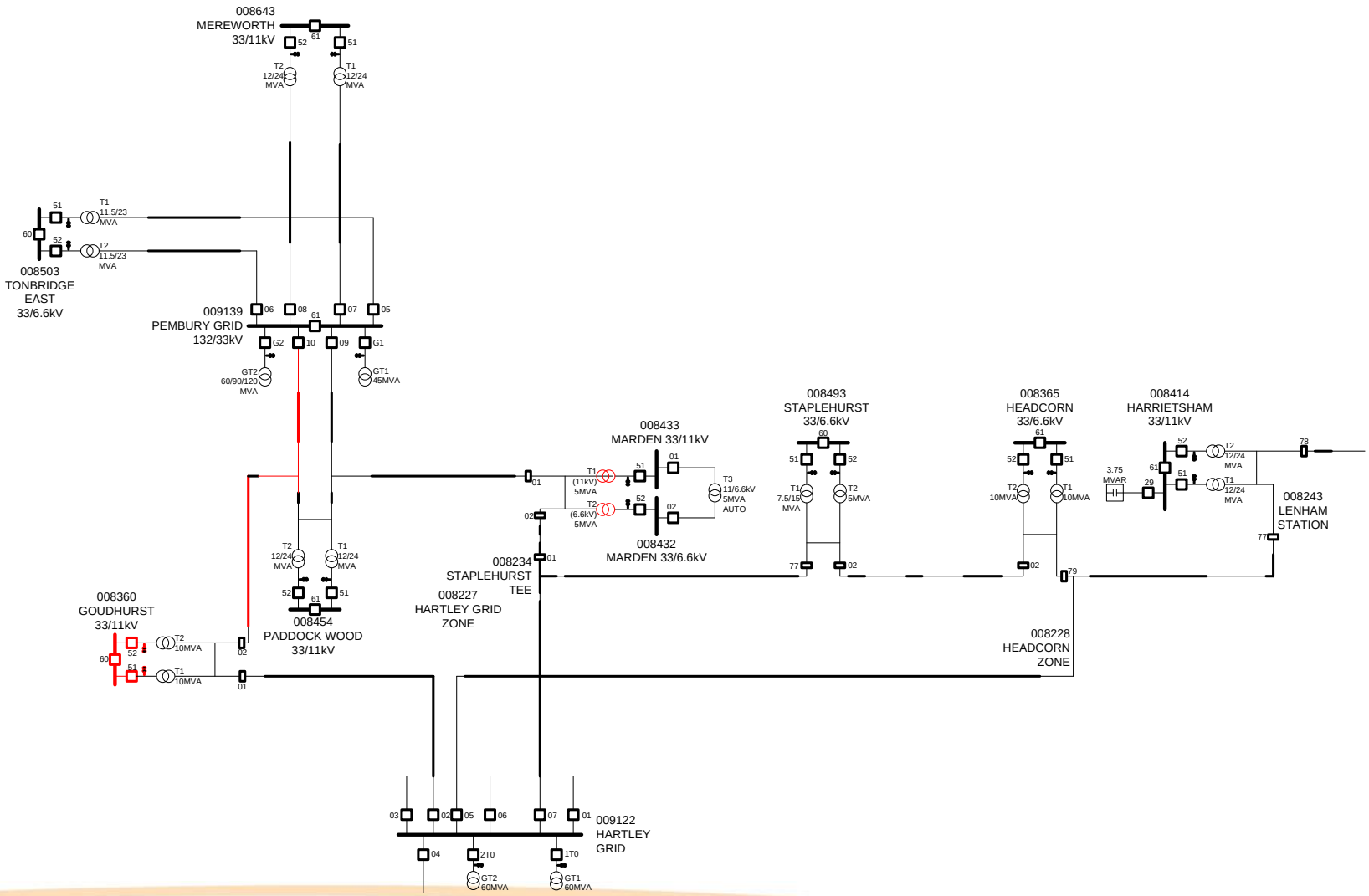

APPENDIX F: SINGLE LINE DIAGRAM – RECOMMENDED STRATEGY (33KV NETWORK – HARTLEY - RYE)

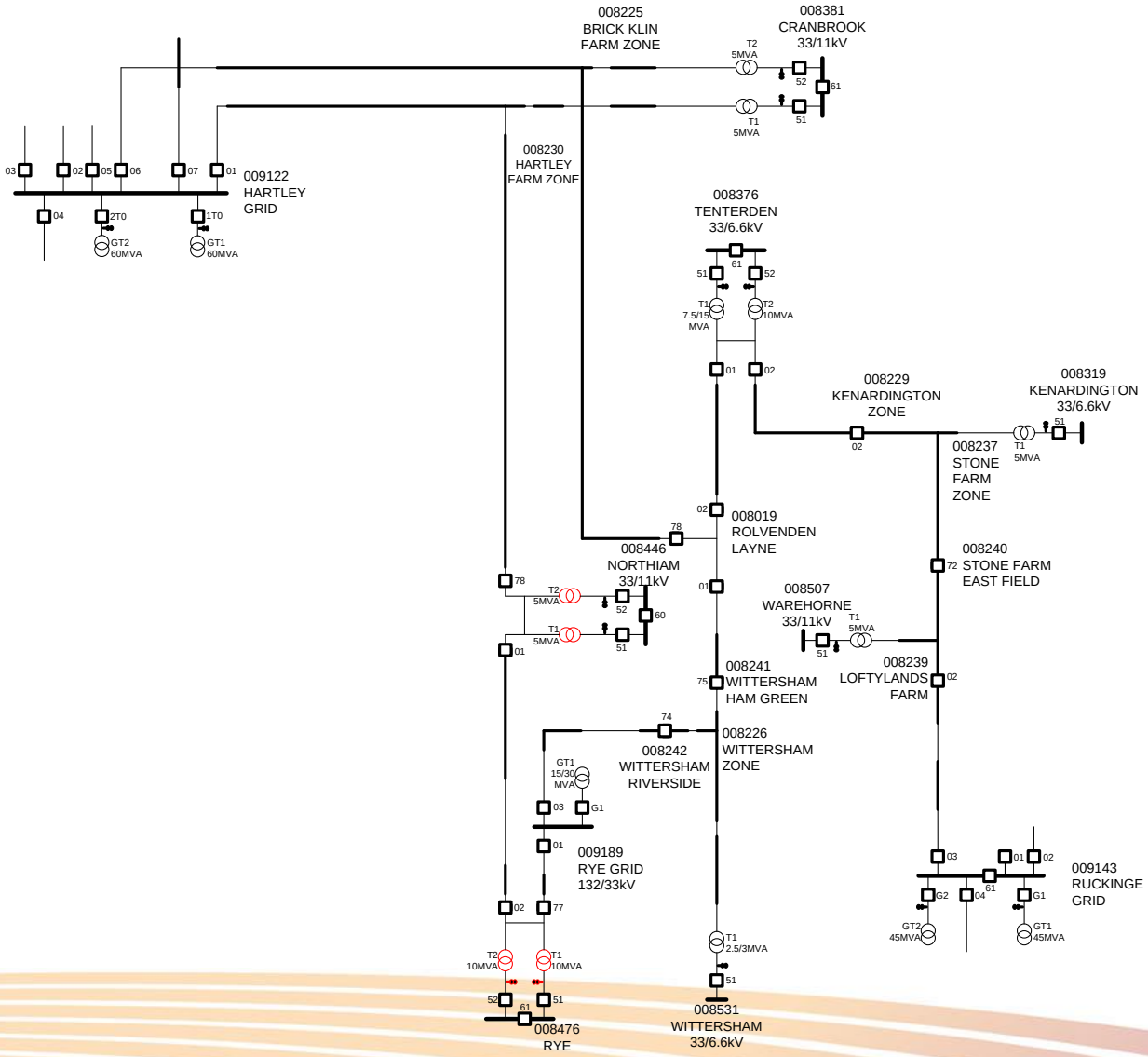

APPENDIX G: SINGLE LINE DIAGRAM – RECOMMENDED STRATEGY (33KV NETWORK – HARTLEY - POLEGATE)

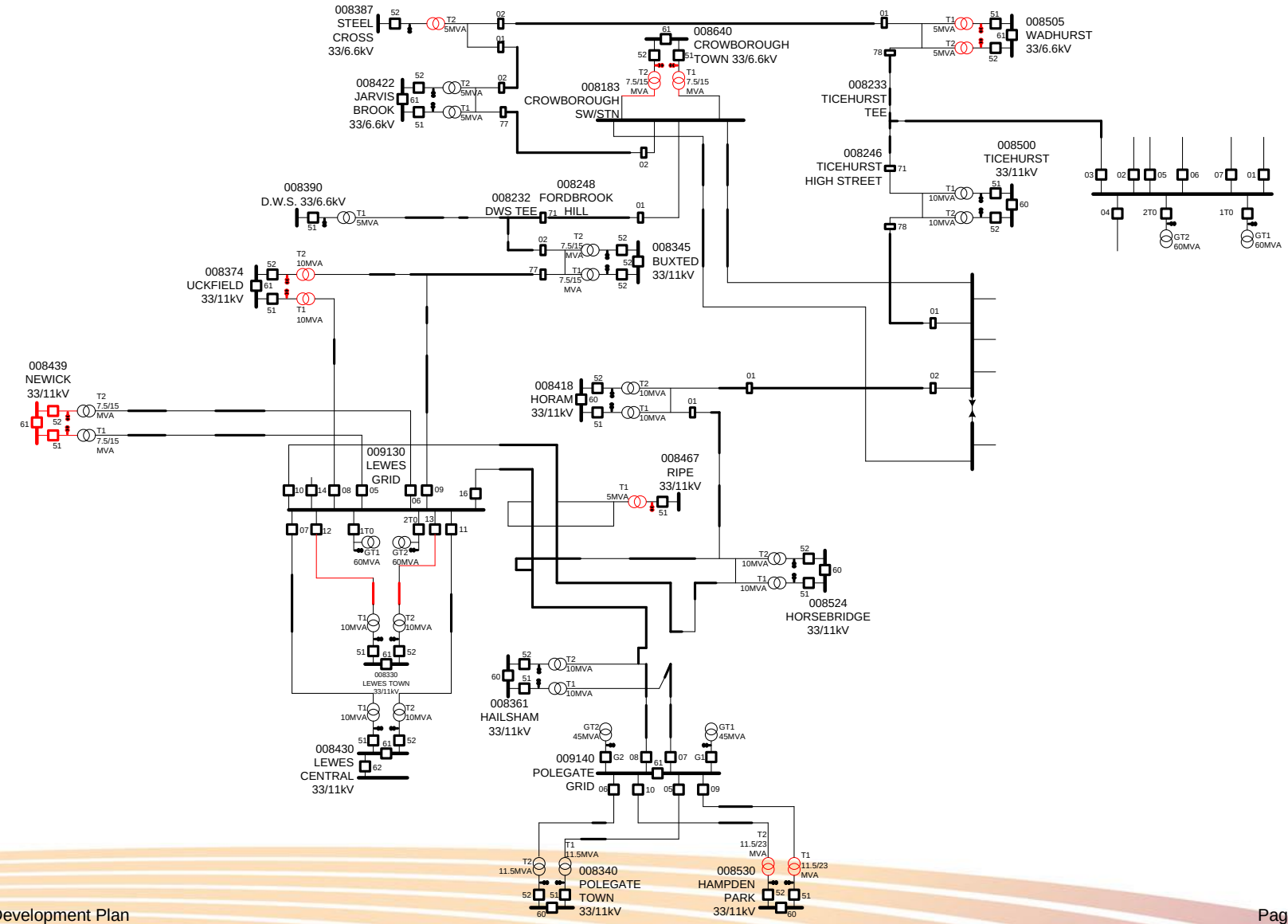

APPENDIX H: SINGLE LINE DIAGRAM – RECOMMENDED STRATEGY (33KV NETWORK – NEWHAVEN - BRIGHTON